Complete column shower with external shower mixer white lever
Codice: **50485**

FUNCTIONAL DATA
SCOPE OF APPLICATION: shower
TYPE OF PROJECT: residential
FURNISHING STYLE: classic, modern
FLOW REGULATION: suitable
TYPE OF DISPENSING: double (head shower and hand shower)

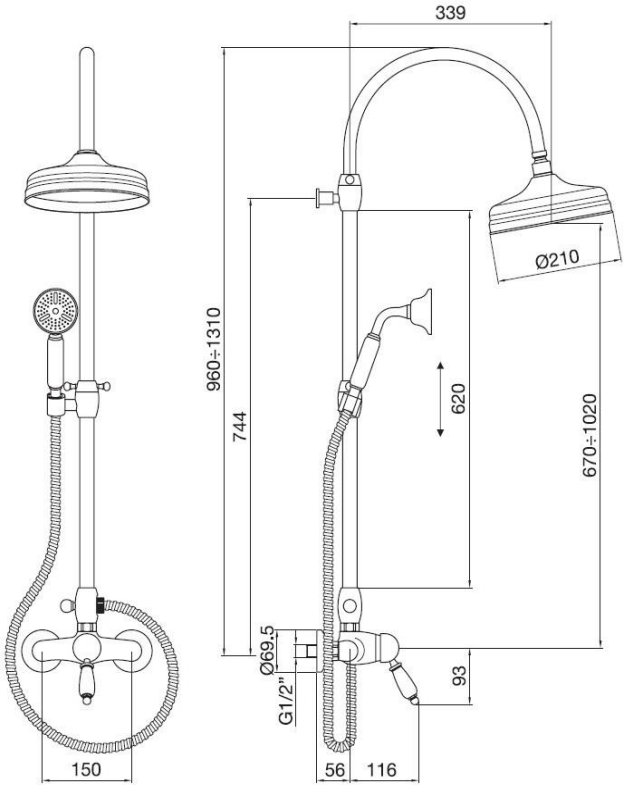

CONSTRUCTION DATA
TYPE OF MATERIAL: brass
TYPE OF FIXING: wall-mounted
TYPE OF VALVE: ceramic disc cartdridge
ANGLE OF ROTATION: 90°
SUPPLY CONNECTION: 1/2"
OPTIONAL: limited flow regulator 8 litres/min - 1,5 GPM

AVAILABLE COLOURS
Chrome
Natural brass
Chrome gold
Satin bronze
Copper
Dark bronze
Dark copper
Old nickel
Gold

HYDRAULIC PERFORMANCES
OPTIMAL SUPPLY PRESSURE: 3 bar
MAXIMUM HOT WATER TEMPERATURE: 80°
RECOMMENDED MAX. HOT WATER TEMPERATURE: 60°

WARRANTY
See current price list

MAINTENANCE
DO NOT use scouring pads or cleaning agents containing alcohol, chlorine, acids, abrasives or similar. Use of any of the prohibited cleaning or maintenance products could damage the faucet surface. Use ONLY soap and water to clean the surface, then dry with a cloth or towel. Do not use abrasive or rough sponges.

Porta & Bini reserves the right to make any changes to its products without prior notice. The dimensions depicted within the graphic representations are to be considered indicative and subject to possible variation. If you have any questions, please contact your authorised Porta & Bini supplier.

Porta & Bini Srl Faucet Company
Via per Alzo 60, 28017
San Maurizio d'Opaglio NO
www.portaebini.it