Bath border mixer with diverter and hand shower
Codice: **40181**

FUNCTIONAL DATA
SCOPE OF APPLICATION: bathtub
TYPE OF PROJECT: residential
FURNISHING STYLE: classic, modern
TYPE OF DISPENSING: single

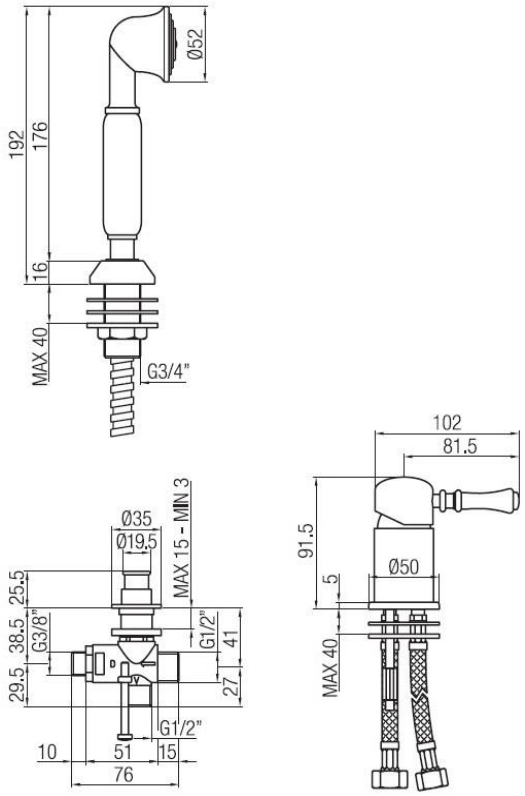

CONSTRUCTION DATA
TYPE OF MATERIAL: brass
TYPE OF FIXING: deck-mounted
TYPE OF VALVE: ceramic disc cartdridge
ANGLE OF ROTATION: 90°
SUPPLY CONNECTION: 3/8" stainless steel hose
NUMBER OF INSTALLATION HOLES: 3
DIAMETER OF INSTALLATION HOLES: mixer 35 mm, diverter and hand shower 27 mm
SPACING OF INSTALLATION HOLES: 130 mm (recommended)

AVAILABLE COLOURS
Chrome
Natural brass
Black matt
Satin bronze
Copper
Dark bronze
Dark copper
Gold
PVD Ultrasatin brass

HYDRAULIC PERFORMANCES
OPTIMAL SUPPLY PRESSURE: 3 bar
MAXIMUM HOT WATER TEMPERATURE: 80°
RECOMMENDED MAX. HOT WATER TEMPERATURE: 60°

WARRANTY
See current price list

MAINTENANCE
DO NOT use scouring pads or cleaning agents containing alcohol, chlorine, acids, abrasives or similar. Use of any of the prohibited cleaning or maintenance products could damage the faucet surface. Use ONLY soap and water to clean the surface, then dry with a cloth or towel. Do not use abrasive or rough sponges.

Porta & Bini reserves the right to make any changes to its products without prior notice. The dimensions depicted within the graphic representations are to be considered indicative and subject to possible variation. If you have any questions, please contact your authorised Porta & Bini supplier.

Porta & Bini Srl Faucet Company
Via per Alzo 60, 28017
San Maurizio d'Opaglio NO
www.portaebini.it