Single lever basin mixer with pop up waste
Codice: **20110**

FUNCTIONAL DATA
SCOPE OF APPLICATION: basin
TYPE OF PROJECT: residential
FURNISHING STYLE: modern
TYPE OF DISPENSING: single (fixed aerator)
WASTE: automatic cap 1" 1/4

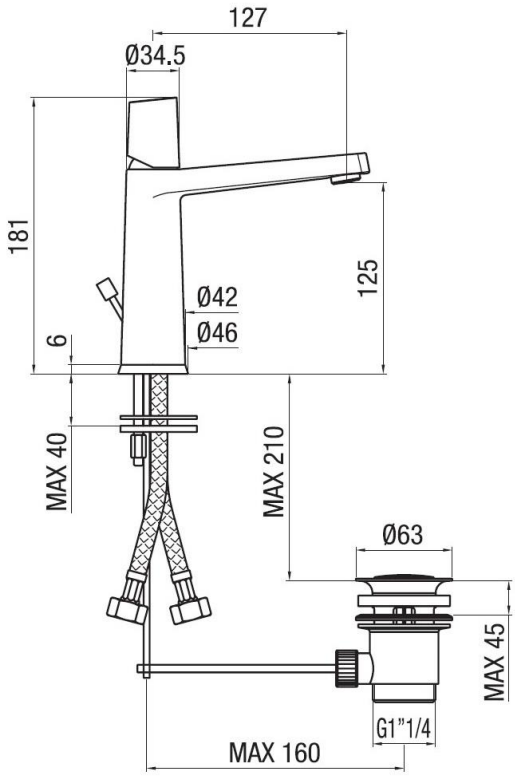

CONSTRUCTION DATA
TYPE OF MATERIAL: brass
TYPE OF FIXING: deck-mounted
TYPE OF VALVE: ceramic disc cartdridge
ANGLE OF ROTATION: 90°
SUPPLY CONNECTION: 3/8" stainless steel hose
SPOUT SPACING: 127 mm
NUMBER OF INSTALLATION HOLES: 1
DIAMETER OF INSTALLATION HOLE: 35 mm

AVAILABLE COLOURS
Chrome
Black matt
Dark copper
Satin nichel
Graphite
Gold
PVD Ultrasatin copper
PVD Ultrasatin brass

HYDRAULIC PERFORMANCES
OPTIMAL SUPPLY PRESSURE: 3 bar
MAXIMUM HOT WATER TEMPERATURE: 80°
RECOMMENDED MAX. HOT WATER TEMPERATURE: 60°

WARRANTY
See current price list

MAINTENANCE
DO NOT use scouring pads or cleaning agents containing alcohol, chlorine, acids, abrasives or similar. Use of any of the prohibited cleaning or maintenance products could damage the faucet surface. Use ONLY soap and water to clean the surface, then dry with a cloth or towel. Do not use abrasive or rough sponges.

Porta & Bini reserves the right to make any changes to its products without prior notice. The dimensions depicted within the graphic representations are to be considered indicative and subject to possible variation. If you have any questions, please contact your authorised Porta & Bini supplier.

Porta & Bini Srl Faucet Company
Via per Alzo 60, 28017
San Maurizio d'Opaglio NO
www.portaebini.it