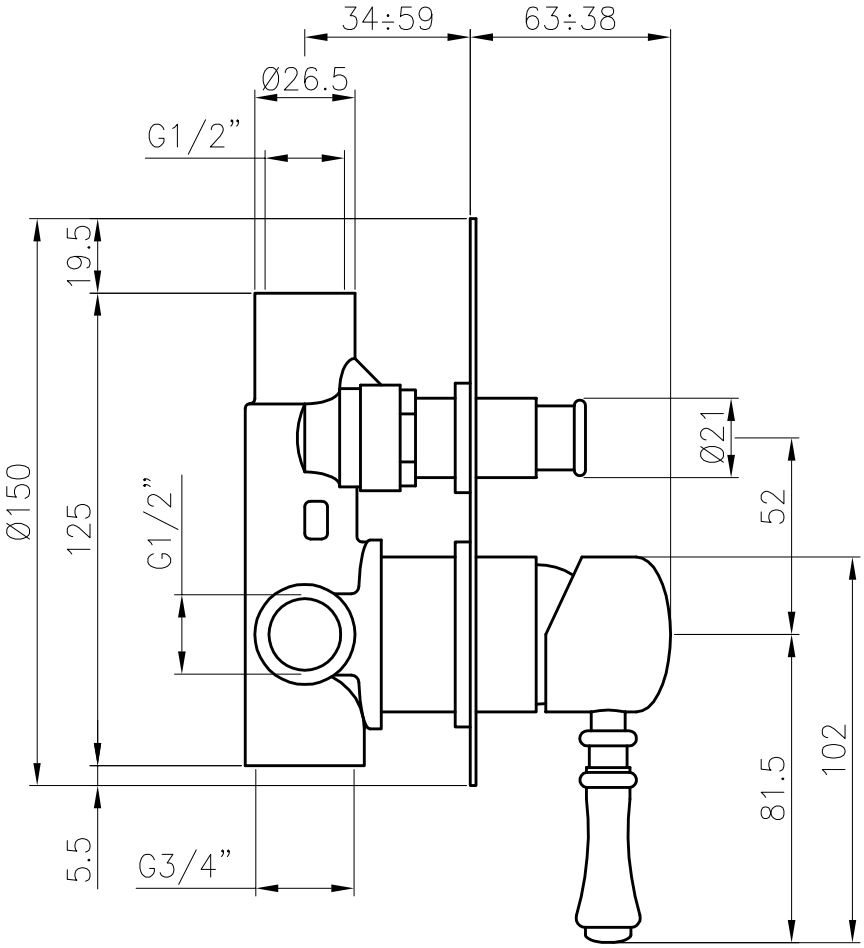
34÷59
63÷38
Ø26.5
G1/2”
19.5
Ø150
125
G1/2”
5.5
G3/4”
Ø21
52
81.5
102