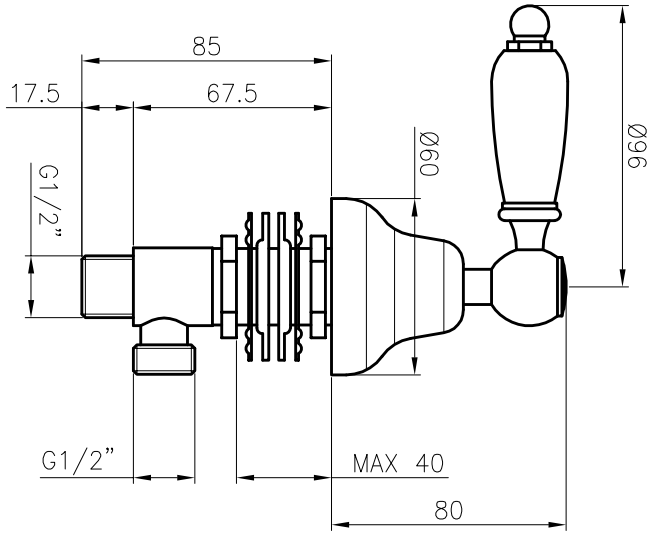
85
17.5
67.5
G1/2”
Ø60
Ø96
G1/2”
MAX 40
80

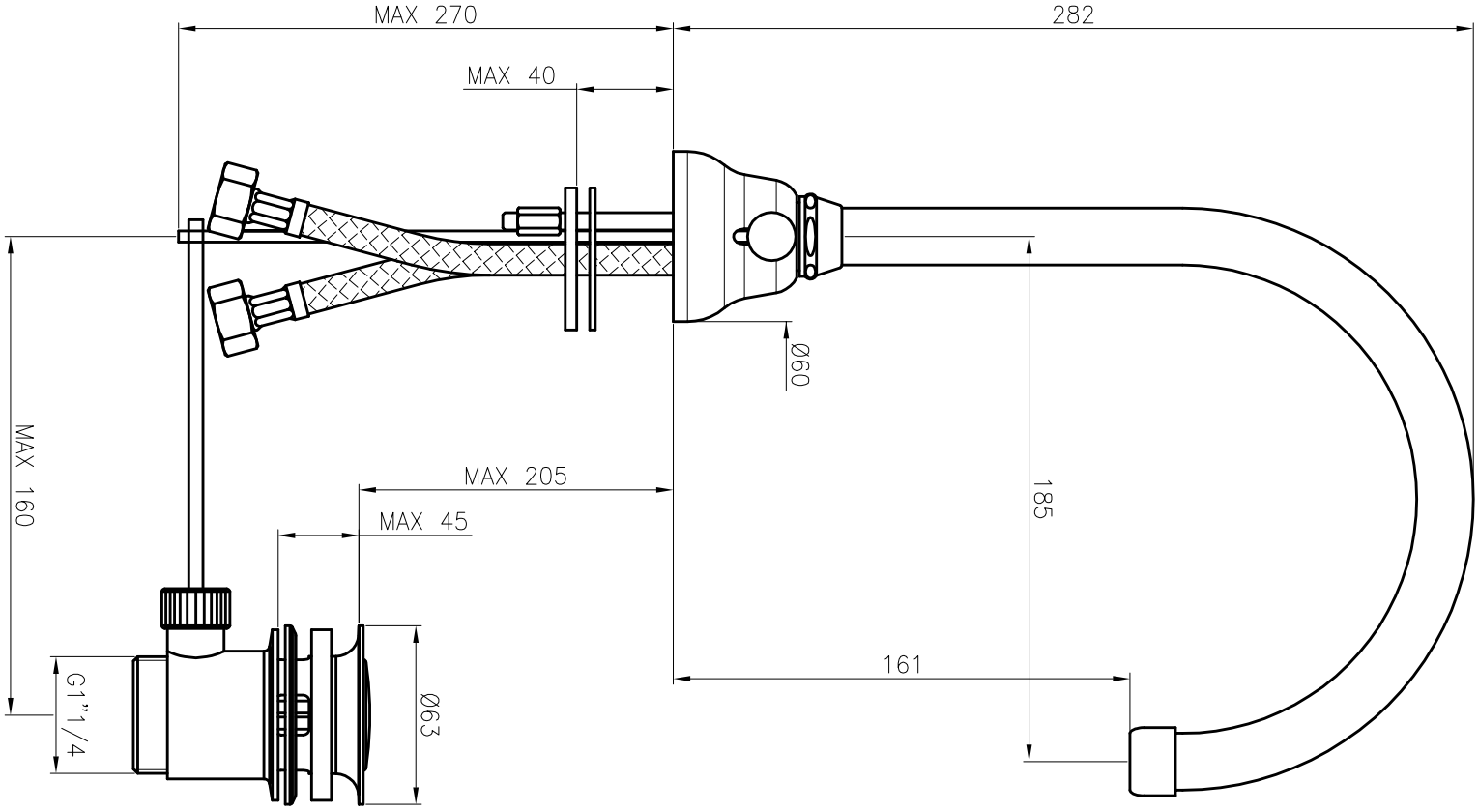
MAX 270
282
MAX 40
Ø60
MAX 160
MAX 205
MAX 45
185
161
G1”1/4
Ø63

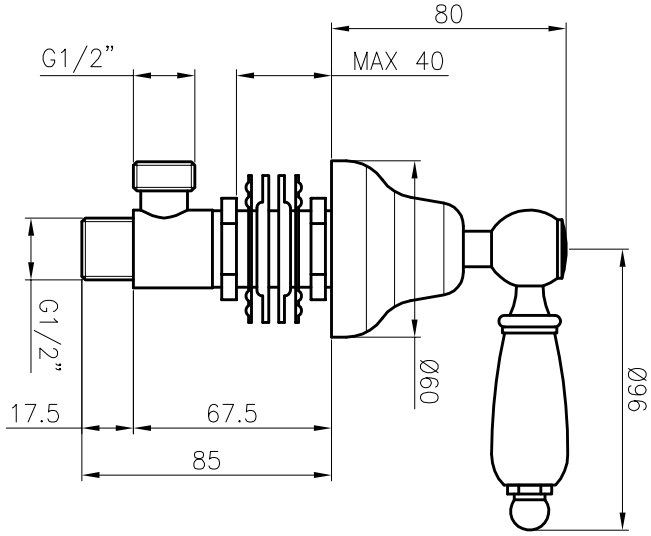
80
G1/2”
MAX 40
G1/2”
Ø60
Ø96
17.5
67.5
85